CREALITY

3D Printer User Manual

3D打印机使用说明书

CR-10 V3

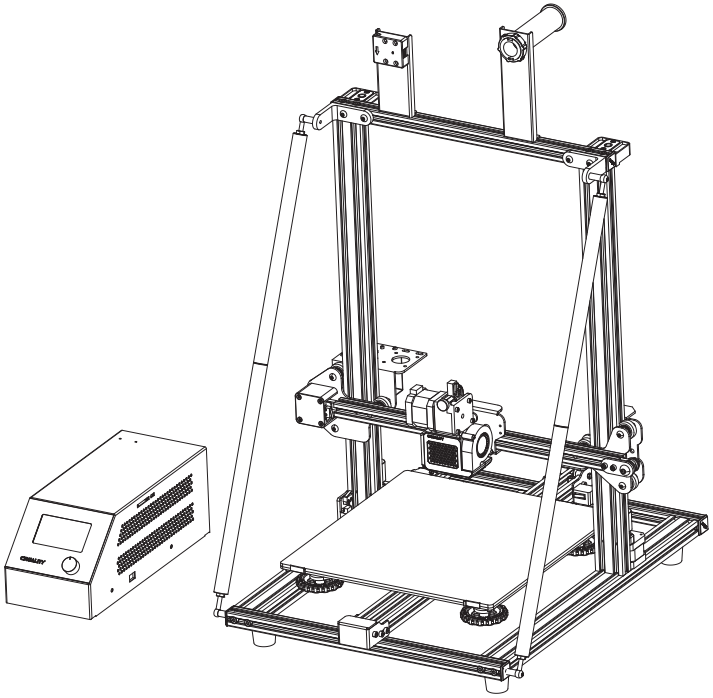

V1.0

Content 目录

Dear Consumers,
Thank you for choosing our products. For the best experience, please read the instructions before operating the Printer. Our teams will always be ready to render you the best services. Please contact us via the phone number or e-mail address provided at the end when you encounter any problem with the Printer.
For a better experience in using our product, you can also learn how to use the Printer in the following ways:
View the accompanied instructions and videos in the storage card.
Visit our official website www.creality.com to find relevant software/hardware information, contactdetails and operation and maintenance instructions.

尊敬的创想三维用户：
感谢您选择、使用创想三维的产品。为了您使用方便，请您在使用之前仔细阅读该说明书，并严格按照说明书的指示进行操作。
创想三维团队时刻准备为您提供优质的服务。在使用过程中无论遇到什么问题，请按照说明书结尾所提供的电话、邮箱与我们进行联系。
为了您能够更好地体验我们的产品，您还可以从以下方式获取设备操作知识：
随机使用说明：你可以在存储卡内找到相关使用说明及视频。
创想三维官网：www.cxsw3d.com 您可以登陆创想三维官网寻找相关软硬件、联系方式、设备操作、设备保养等信息。

A **Notes**
使用须知

B **Assemble the 3D Printer**
组装 3D 打印机

C **Use the 3D Printer**
使用 3D 打印机

Level the Heated Bed
调平

Load Filament
装料

Start Printing
开始打印

NOTES 使用须知

1.Do not use the printer any way other than described herein in order to avoid personal injury or property damage.
2.Do not place the printer near any heat source or flammable or explosive objects. We suggest placing it in a well-ventilated, low-dust environment.
3.Do not expose the printer to violent vibration or any unstable environment, as this may cause poor print quality.
4.Before using experimental or exotic filaments, we suggest using standard filaments such as ABS or PLA to calibrate and test the machine.
5.Do not use any other power cable except the one supplied. Always use a grounded three-prong power outlet.
6.Do not touch the nozzle or printing surface during operation as they may be hot. Keep hands away from machine while in use to avoid burns or personal injury.
7.Do not wear gloves or loose clothing when operating the printer. Such cloths may become tangled in the printers moving parts leading to burns, possible bodily injury, or printer damage.
8.When cleaning debris from the printer hotend, always use the provided tools. Do not touch the nozzle directly when heated. This can cause personal injury.
9.Clean the printer frequently. Always turn the power off when cleaning, and wipe with a dry cloth to remove dust, adhered printing plastics or any other material off the frame, guide rails, or wheels . Use glass cleaner or isopropyl alcohol to clean the print surface before every print for consistent results.
10.Children under 10 years of age should not use the printer without supervision.
11.This machine is equipped with a security protection mechanism. Do not manually move the nozzle and printing platform mechanism manually while booting up, otherwise the device will automatically power off for safety.
12.Users shall comply with related nation and region' s laws, regulations and ethical codes where the equipment or produced prints by it is used, and users of our product shall not use aforesaid products to print any end-use products,objects,parts or components or any other physical prints that violate the national or regional laws, regulations and ethical codes where herein referred product and produced prints by it is located.

1、请勿尝试任何使用说明中没有描述的方法来使用本机，避免造成的意外人身伤害和财产损失；
2、请勿将本机放置在易燃易爆物品或高热源附近，请将本机放置在通风、阴凉、少尘的环境内；
3、请勿将打印机放置在振动较大或者其他不稳定的环境内，机器晃动会影响打印机打印质量；
4、建议使用厂家推荐耗材，以免造成挤出头堵塞和机器损坏；
5、请勿在安装过程中使用其他产品电源线代替，请使用本机附带的电源线，电源插头需接插在带有地线的三孔插座；
6、请勿在打印机工作时接触喷嘴以及热床，以防止出现高温烫伤，造成人身伤害；
7、请勿在操作机器时佩带手套或缠绕物，以防可动部件对人身部件造成卷入挤压和切割伤害；
8、在打印完毕后及时利用喷头的余温借助工具将喷头上的耗材清理干净，清理时请勿直接用手触摸喷头，以防出现烫伤；
9、常做产品维护，定期在断电的情况下，用干布对打印机做机身清洁，拭去灰尘和粘结的打印材料、导轨上的异物；
10、年龄在10岁以下的儿童，请勿在没有人员监督的情况下使用本机，以免造成人身伤害；
11、本机设有安全保护机制，请勿在开机状态下手动快速移动喷头及打印平台机构，否则设备会自动断电关机保护；
12、使用者应遵守设备打印产品与设备所在地及相应国家及地区法律、法规，恪守职业道德，严禁使用我司产品打印有违设备打印产品与设备所在地及相应国家、地区法律禁止的任何产品或物件。

Introduction 设备简介

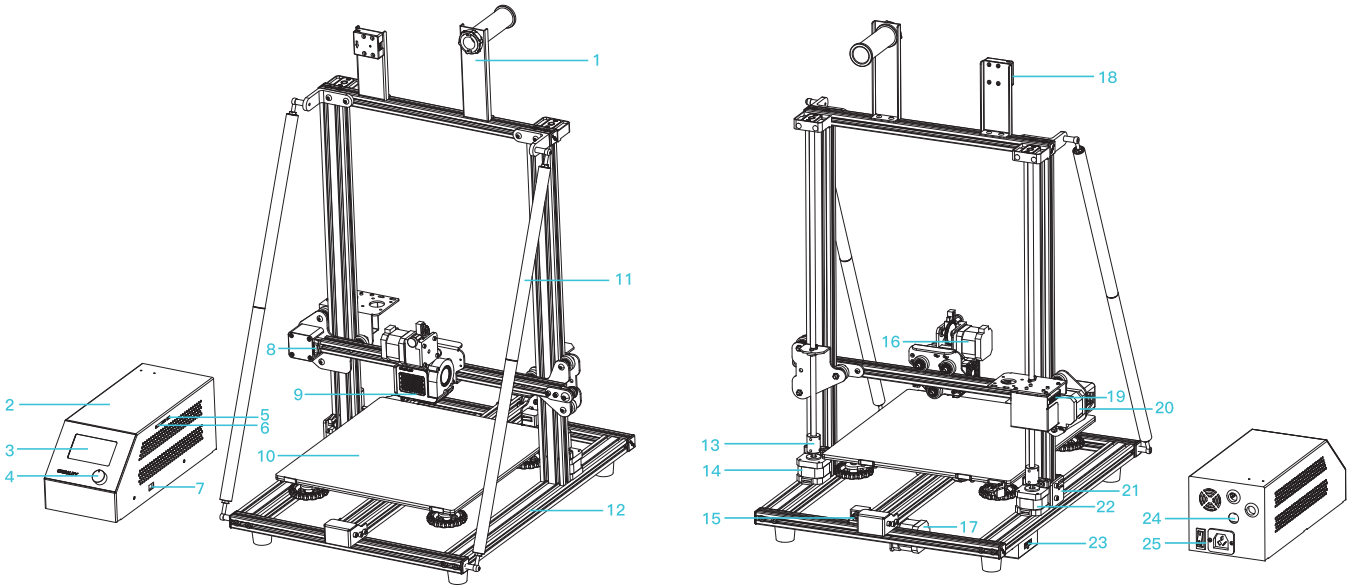

1 Filament Holder料架及料管
2 Control Box 控制盒
3 LCD Screen 显示屏
4 Knob 旋钮
5 USB por USB接口
6 Storage Card Slot 存储卡槽
7 Voltage Selection 电压调节档
8 X Limit Switch X轴限位开关
9 Nozzle Kit 喷头套件
10 Printing Platform 打印平台
11 Pull Rod 拉杆
12 Base Frame 机器底座
13 Coupling 联轴器
14 Z-axis Motor（Z2） Z轴电机（Z2）
15 Y Limit Switch Y轴限位开关
16 Titan Extrusion Device泰坦挤出机
17 Y-axis Motor Y轴电机
18 Filament Detector 断料检测
19 XE Transfer interface XE转接接口
20 X-axis Motor X轴电机
21 Z Limit Switch Z轴限位开关
22 Z-axis Motor（Z1） Z轴电机（Z1）
23 YZ Transfer interfaceYZ转接接口
24 Platform Connection 热床接线口
25 Power Cable Connection 电源组合开关

Parameters 设备参数

Basic Parameters 基本参数	
Model | 型号	CR-10 V3
Printing Size | 成型尺寸	300*300*400mm
Molding Tech | 成型技术	FDM
Nozzle Number | 喷头数量	1
Slice Thickness | 切片层厚	0.1mm-0.4mm
Nozzle Diameter | 喷嘴直径	Standard 0.4mm | 标配0.4mm
Precision | 打印精度	±0.1mm
Fliament | 打印材料	1.75mm PLA
File Format | 切片支持格式	STL/OBJ/AMF
Working Mode | 打印方式	Online or TF card offline | 联机或TF卡脱机
Slice Software | 可兼容切片软件	Creality Slicer/Cura/Repetier-Host/Simplify3D
Power Supply | 额定电压	Input| 输入:AC115/230V 50/60Hz Output|输出:DC 24V
Total Power | 额定功率	350W
Bed Temp | 热床最高温度	≤100°C
Nozzle Temp | 喷嘴最高温度	≤250°C
Resume Print | 断电续打	Yes | 支持
Filament Detector | 断料检测	Yes | 支持
Daul Z-Axis | 双Z轴	Yes | 支持
Auto Leveing | 自动调平	No | 不支持
language Selection | 中英切换	English | 中文
Operating System | 电脑操作系统	Windows XP/Vista//7/8/10 MAC/Linux
Printing Speed | 打印速度	≤180mm/s,Normal|正常为 30-60mm/s

Parts List 零部件清单

1 Gantry Frame | 龙门架 x 1

2 Base Frame | 底座 x 1

3 Pull Rod | 拉杆 x 1

5 Control Box | 控制盒 x 1

4 Filament | 耗材 x 1

6 Tool Box | 工具包 x 1

Tool list 工具包清单

7 Spool & Nuts x 1
料管及料管螺母

8 M5X25 Bolt & Lock Washer x 4
M5X25 螺栓及弹簧垫片

9 Cable Ties x 1
扎带

10 PTFE Tubing x 1 (spare part)
铁氟龙管（备品）

11 Spool Holder x 1
料架

12 Nozzle Cleaner x 1
通针

13 Hex keys, Wrench & Screwdriver x 1
扳手和螺丝刀

14 Spade x 1
铲刀

15 Storage Card & Card Reader x 1
存储卡和读卡器

16 Diagonal Pliers x 1
斜口

17 Material Detection Extension Cord x 1
断料检测线延长线

18 Power Adapter x 1
电源线

19 M3x18 Hexagon Countersunk Head Screw x 4
M3x18内六角沉头螺丝

20 L pull rod connector x 2
L型拉杆连接件

21 hve bolts M6×35 x 4
连接螺栓M6×35

22 Screws M6×40 x 2
机床螺丝M6×40

23 M5x12 screws x 4
M5x12螺丝

24 MST nut x 4
MST型螺母

25 M6 nut x 4
M6螺母

26 Spare Limit switch x 1
备用限位开关

27 M4T nut x 4
M4T型螺母

28 Spare Parts x 2
备用喷嘴部件

29 limit switch for Z axis x 1
Z轴限位开关

30 M4*16 cup head screw x 2
M4*16圆柱头螺钉

31 M5x30Hexagon Socket Button Head Screws x 4
M5x30内六角平圆头螺丝

32 Isolation Column x 4
隔离柱

33 Material Detection Bracket x 1
断料检测支架

34 Material Detection Switch x 1
断料检测开关

35 M4x8 Hexagon Socket Button Head Screws x 4
M4x8内六角平圆头螺丝

1 Install the Gantry Frame
安装龙门架

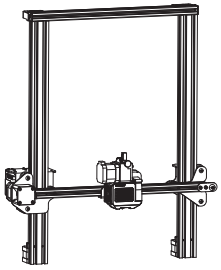

1 Gantry Frame | 龙门架 x 1

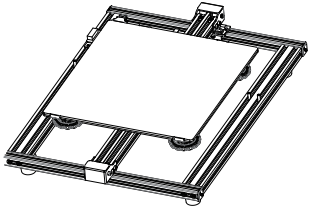

2 Base Frame | 底座 x 1

8 M5X25 Bolt & Lock Washer x 4
M5X25 螺栓及弹簧垫片

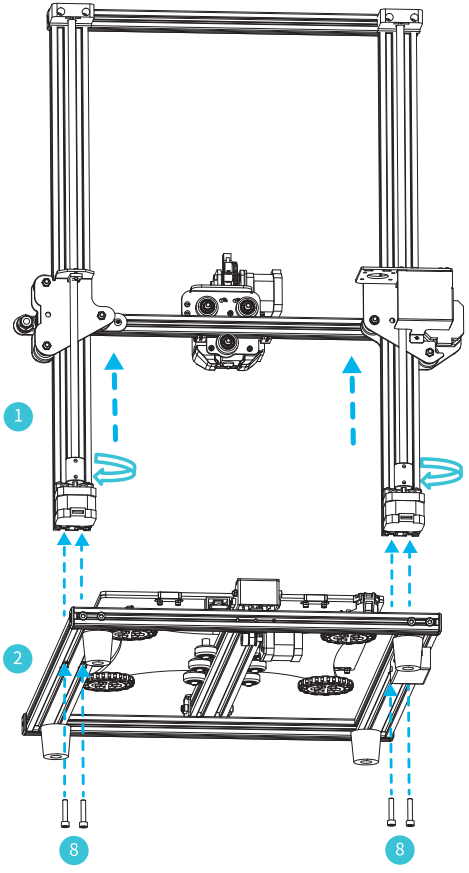

Twist the coupling to raise the X axis to the position as picture shown.
拧动联轴器使X轴上升到如图所示位置。

2 Pull Rod Installation

拉杆安装

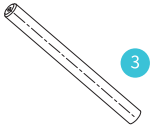

3 Pull Rod x 4
拉杆

20 L pull rod connector x 2
L型拉杆连接件

21 live bolts M6×35 x 4
活接螺栓M6×35

22 Screws M6×40 x 2
机米螺丝M6×40

23 M5x12 screws x 4
M5x12螺丝

24 M5T nut x 4
M5T型螺母

25 M6 nut x 4
M6螺母

31 M5x30Hexagon Socket Button Head Screws x 4
M5x30内六角平圆头螺丝

32 Isolation Column x 4
隔离柱

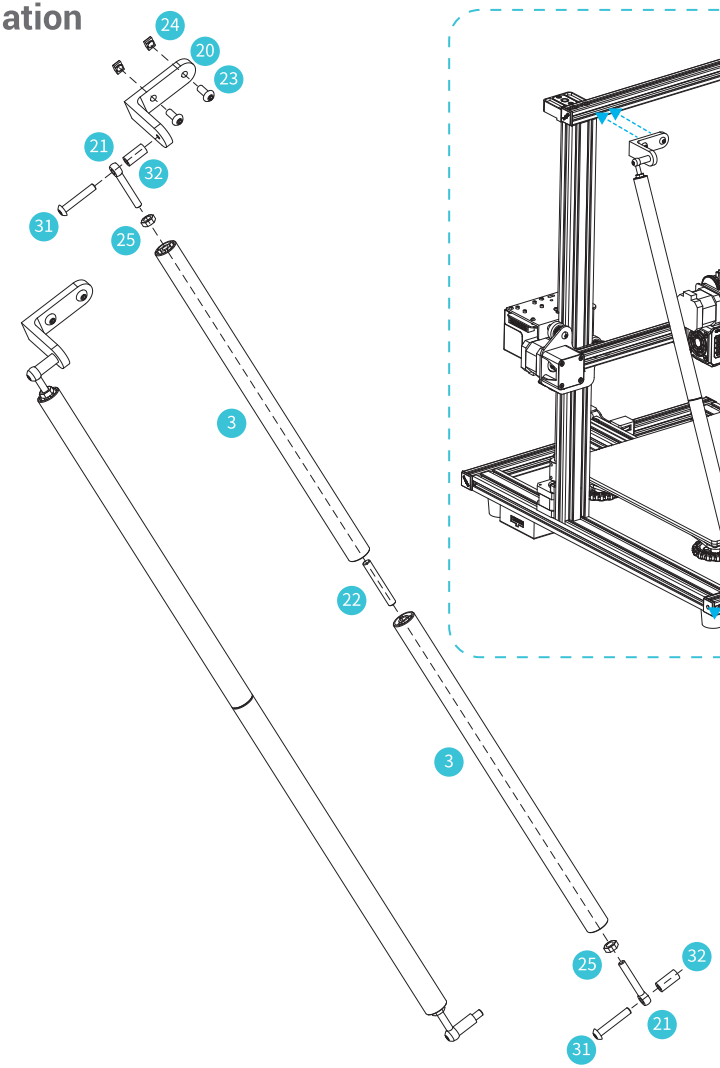

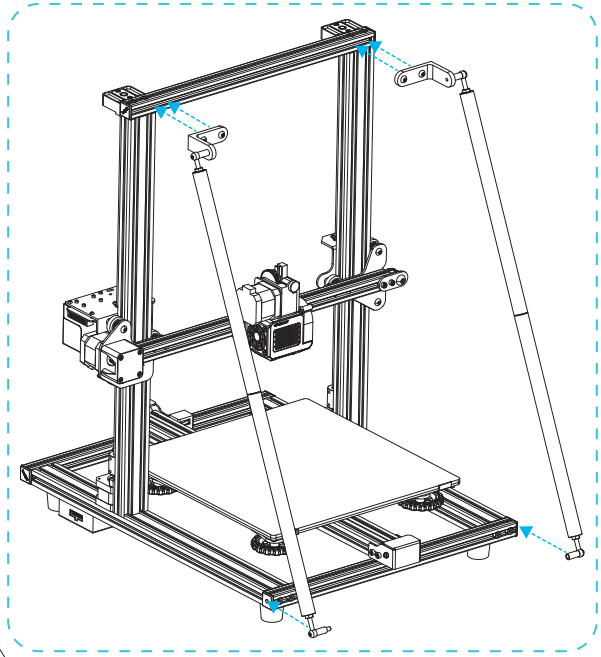

3 Install the Rack and Filament Detector

安装料架和断料检测

7 Spool & Nuts x 1
料管及料管螺母

13 Spool Holder x 1
料架

19 Material Detection Bracket x 1
断料检测支架

38 Material Detection Switch x 1
断料检测开关

35 M4x8 Hexagon Socket Button Head Screws x 4
M4x8内六角平圆头螺丝

27 M4T nut x 4
M4T型螺母

10 M3x18 Hexagon Countersunk Head Screw x 4
M3x18内六角沉头螺丝

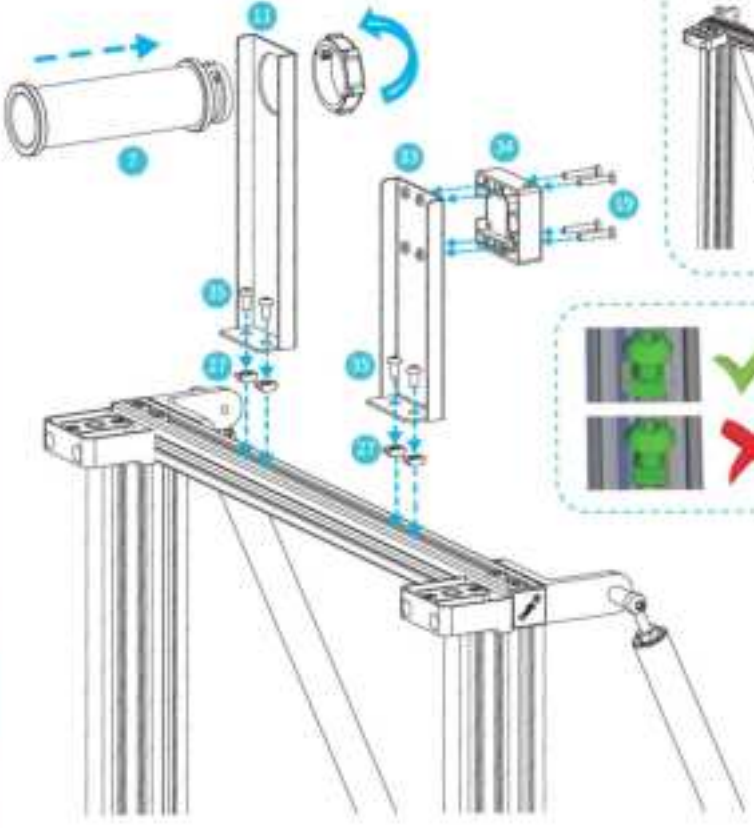

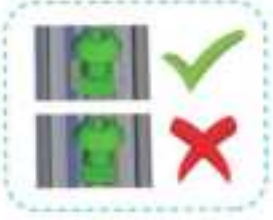

4 Install limit switch for Z axis 安装Z轴限位开关

Align the limit switch with the hole and then lock it on the left profile of the gantry with two M4*16 cup head screw.
将Z轴限位开关，对准孔位后，用2颗M4*16的圆柱头螺钉锁在龙门架左侧型材上。

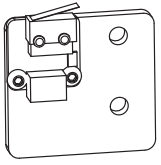

29 limit switch for Z axis x 1
Z轴限位开关

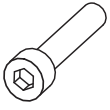

30 M4*16 cup head screw x 2
M4*16圆柱头螺钉

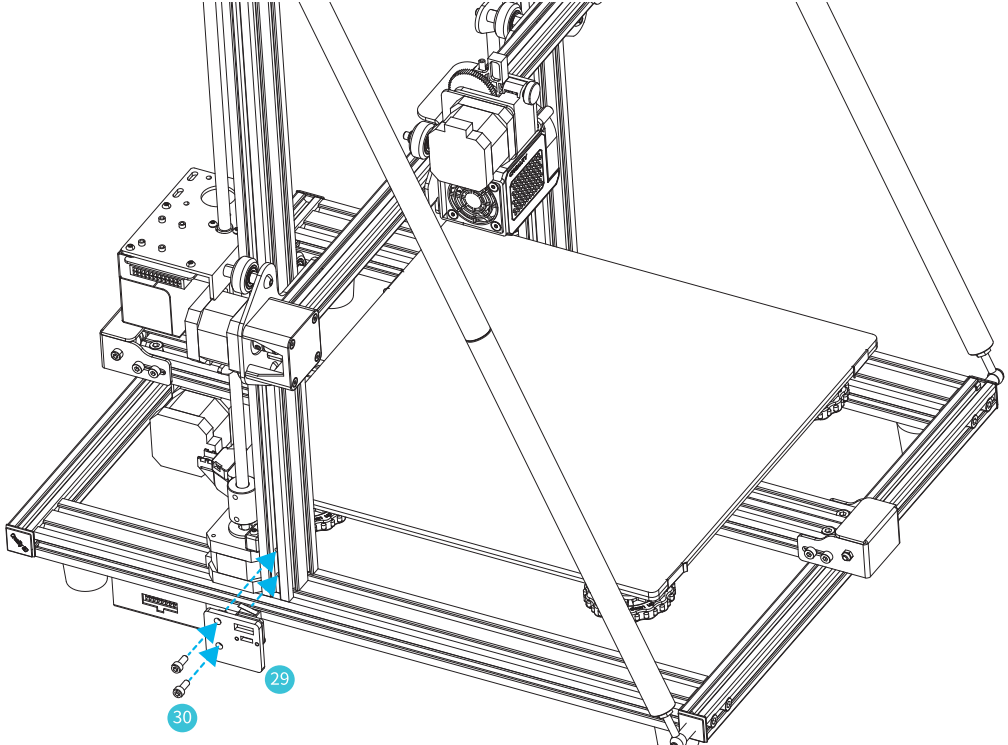

5 Cable Connection 设备接线

Connect the modules to the Controller as illustrated and power on. 按图示将模组连接至控制器，打开电源
Connect the Stepper Motors according to the yellow labels on the 6pin (4-wire) side 按照6pin（4线）端口上黄色标签提示连接步进电机
Connect the Limit Switches according to the yellow labels on the 3pin (2-wire) side 按照3pin（2线）端口上黄色标签提示连接限位开关
Connect the aviation connectors to the ports with corresponding pins 连接对应针数的航空接头

T7 Material Detection X 1
Extension Cord
耗料检测线延长线

T8 Power Adapter X 1
电源线

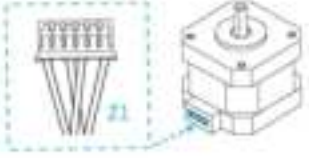

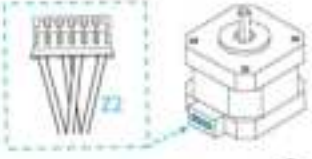

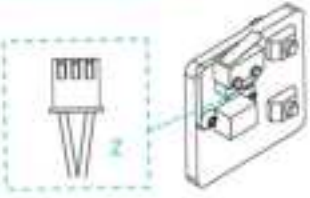

Caution

- Select the correct input voltage to match your local mains (115/230V)
- Damage can occur if voltage is set incorrectly.
- Connect the power cord and turn the power switch to 1 to turn it on.
- Do not connect or disconnect the cables when the machine is powered on.
- 选择正确的输入电压以匹配您的本地电源（115/230V）
- 如果电压设置不正确，可能会造成损坏。
- 连接电源线并将电源开关拨至1档即可开机。
- 当机器通电时，请勿连接或断开连接线。

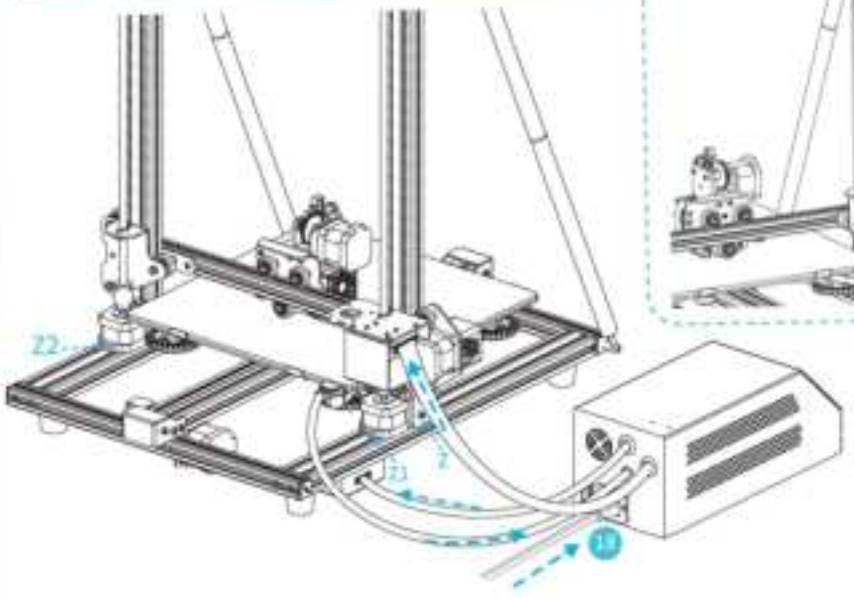

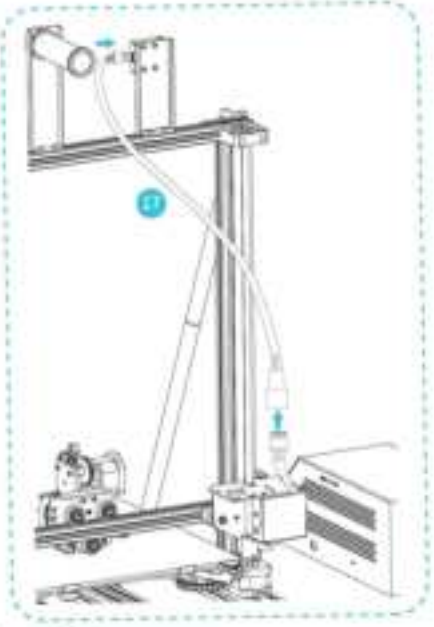

6 Bed Leveling 调平平台

Prepare →Auto Home (Waiting for the nozzle to move to the left/front of the platform) →Prepare→Disable Steppers(Close stepper drive, release motor)

准备→回原点（等待喷嘴移动到平台左前方）→准备→关闭步进驱动（释放电机）

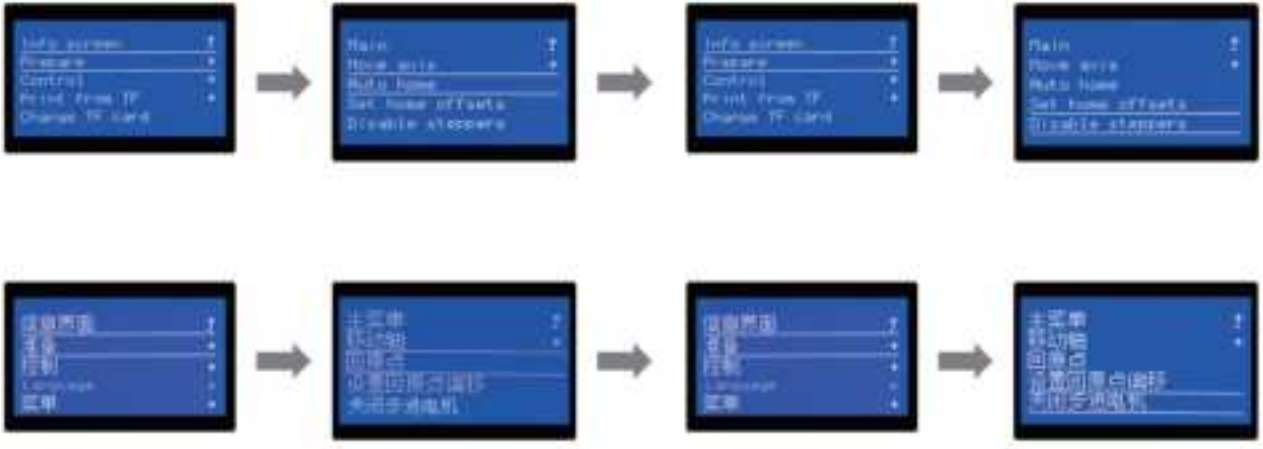

7

Move the nozzle the front/left leveling screw and adjust the platform height by turning the knob underneath (The thickness of a piece of A4 paper) .

Use a piece of A4 paper (standard printer paper) to assist with the adjustment, making sure that the nozzle lightly scratches the paper.
Complete the adjustment of the screw on all 4 corners.Repeat above steps 1-2 times if necessary.Keep adjusting until there is slight resistance on the A4 paper from the nozzle.

移动喷嘴至螺丝上方附近，拧动螺丝，调节打印平台喷嘴至二者处于刚好贴合状态，间距约为0.1mm（一张A4纸的厚度）。
我们可以利用一张A4纸辅助调平，使喷嘴刚好能在A4纸上产生划痕。依次完成四个边角上调平螺丝的调节。不断调整直到在拉动A4纸时能感受到来自喷嘴的轻微阻力。

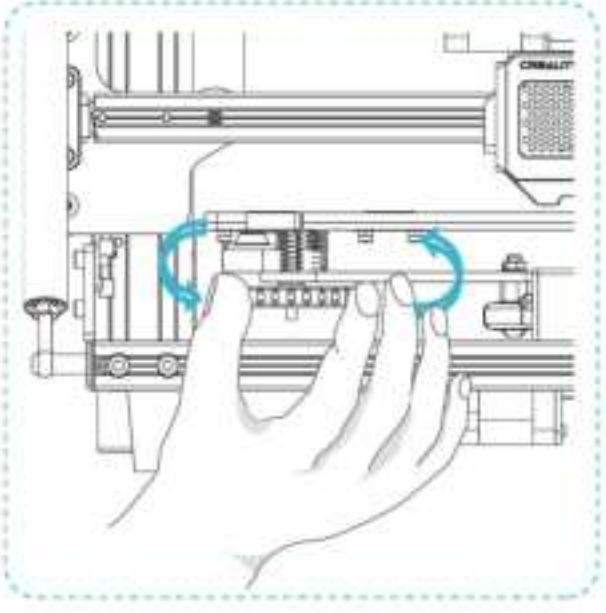

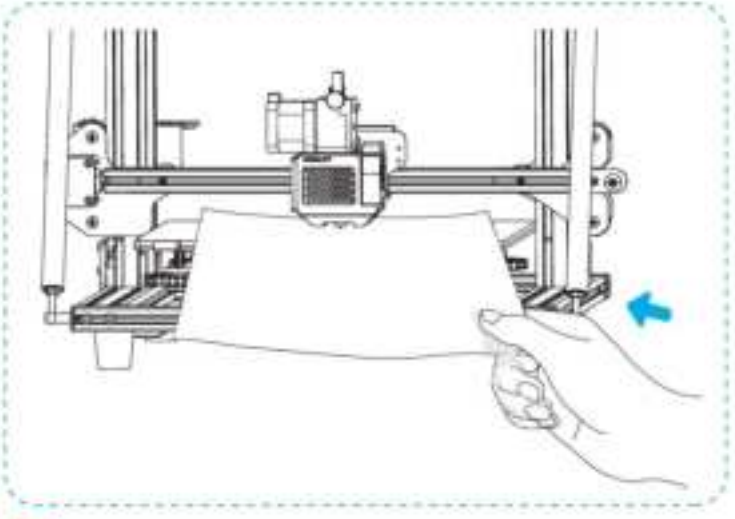

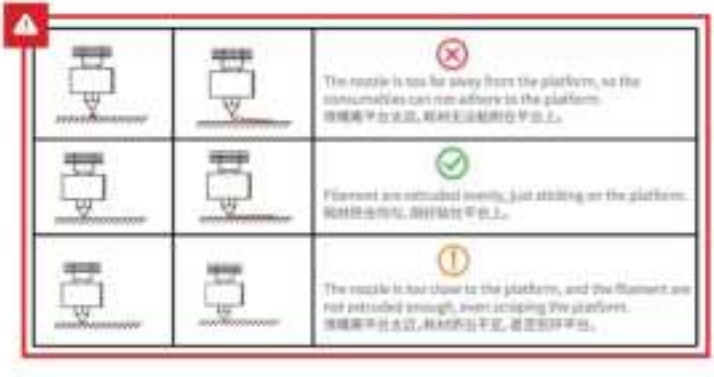

8 Preheating
预热

Method 1

Method 2

方法1

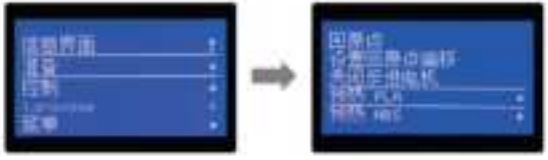

方法2

9

When you wait for the temperature to rise, hang the filament over the Filament Holder.
当您等待温度上升时，把耗材挂在料架上。

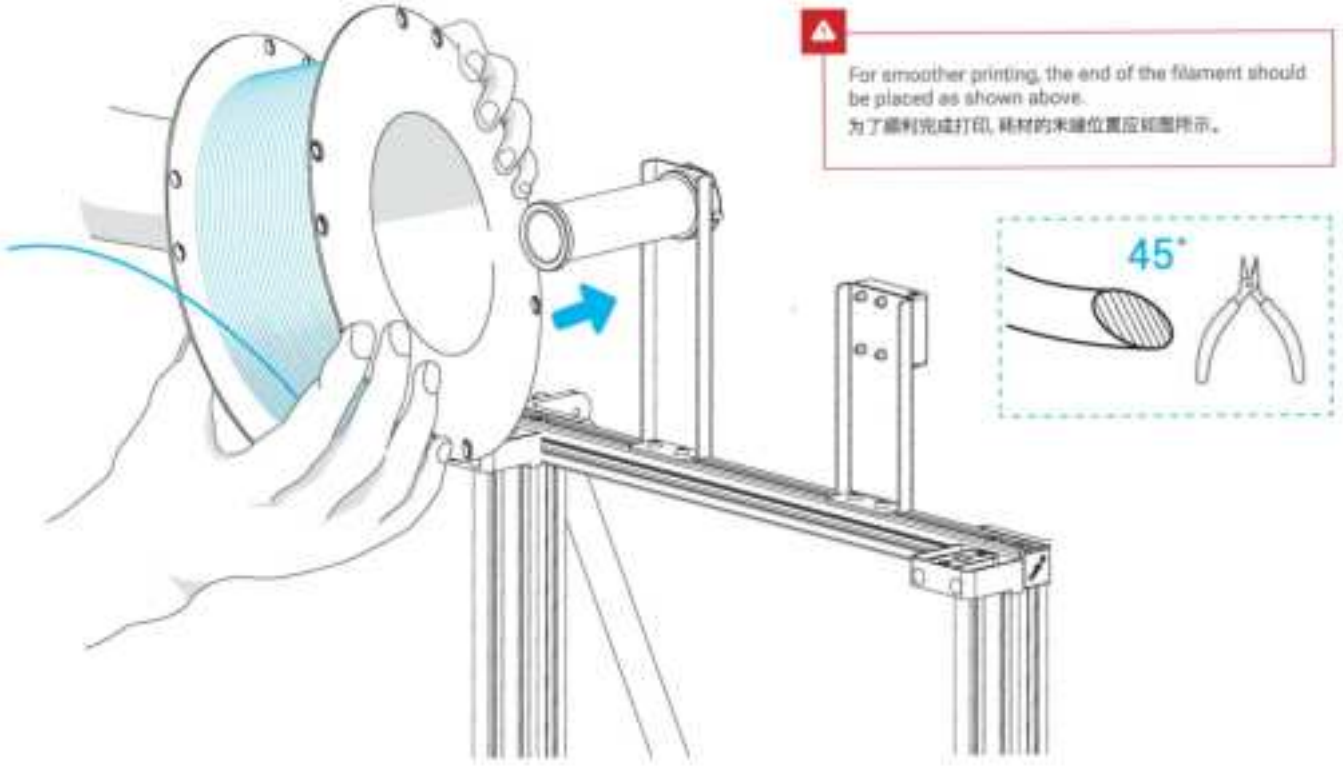

10 Load Filament 装料

When the current temperature hits the target temperature, Pass the filament through the filament sensor, press the extrusion spring and feed in the filaments to the nozzle, and then keep await until you see the liquid filament comes out of the nozzle.

当前温度达到目标温度时，将耗材穿过断料检测，按住挤出机弹簧，将耗材插入挤出机小孔直至喷嘴位置，等着到喷嘴处有耗材流出即表示耗材已经装载完成。

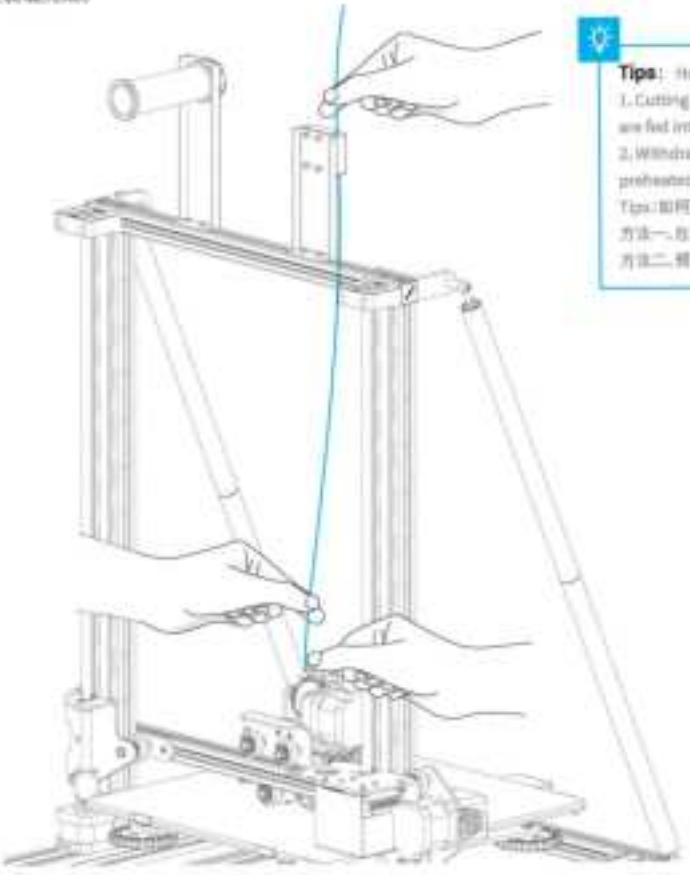

Tips: How to Replace the Filament?

1. Cutting filament near the Extruder and slowly feed new filament until they are fed into the new filament.
2. Withdrawing the filament quickly and feeding the new faliment after nozzle preheated and filament pushed a little forward.

Tips：如何更换耗材？

方法一、在靠近挤出机处将耗材剪断，将新耗材缓缓送入，直到耗材被送入导料管为止。

方法二、预热喷嘴后，将耗材往后推进一下后，迅速抽出耗材，将新耗材送入。

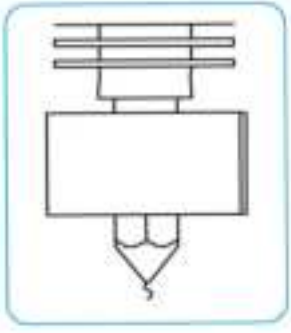

11 Start Printing
开始打印

1. Double click to install the software. | 安装软件
2. Double click to open the software. | 打开软件

3. Select language→Next→Select your machine→Next→Finish.

3.依次选择语言→Next→选择对应机型→Next→Finish,完成设置.

4.Open the software→Load→Select the file→Wait for slicing to finish
打开创想三维切片软件→Load(读取文件)→选择文件

12 Start Printing
开始打印

5.Generate G-code, and save the gcode file to storage card.
生成 G 代码→保存

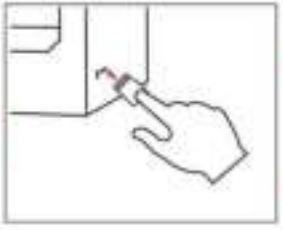

6.Insert the storage card→ Print → Select the file to be printed.
插入存储卡→按下旋钮→ 选择由菜单→要打印的文件

File names must be Latin letters or numbers, not Chinese characters or other special symbols
文件名需为拉丁字母或数字，不能为汉字或其他特殊符号

Notes: For details on the software instructions, please refer to the slicing software manual in the memory card!
温馨提示：软件使用说明详情，请见存储卡内切片软件使用手册！

Circuit Wiring

电路接线

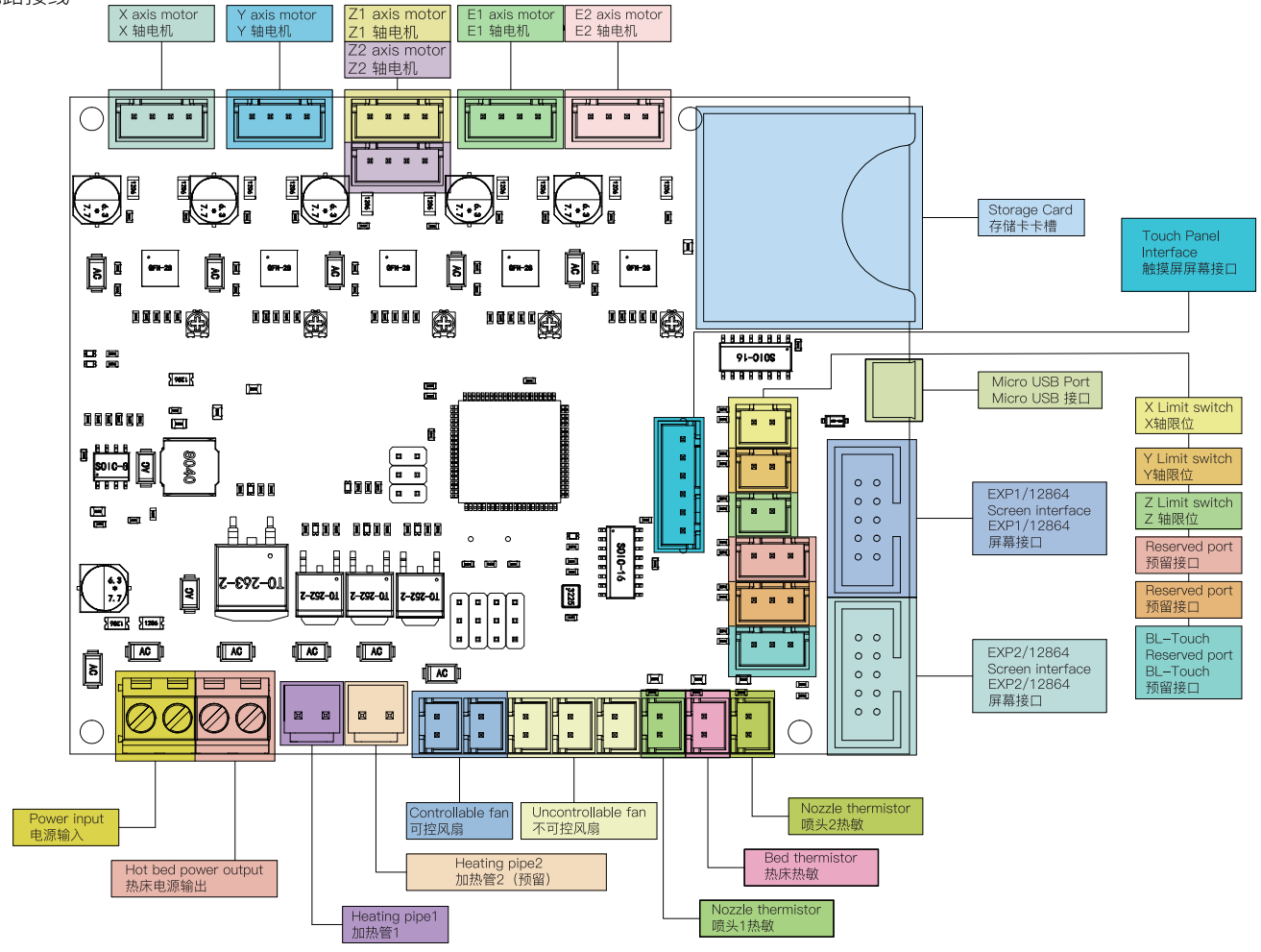

Trouble-shooting

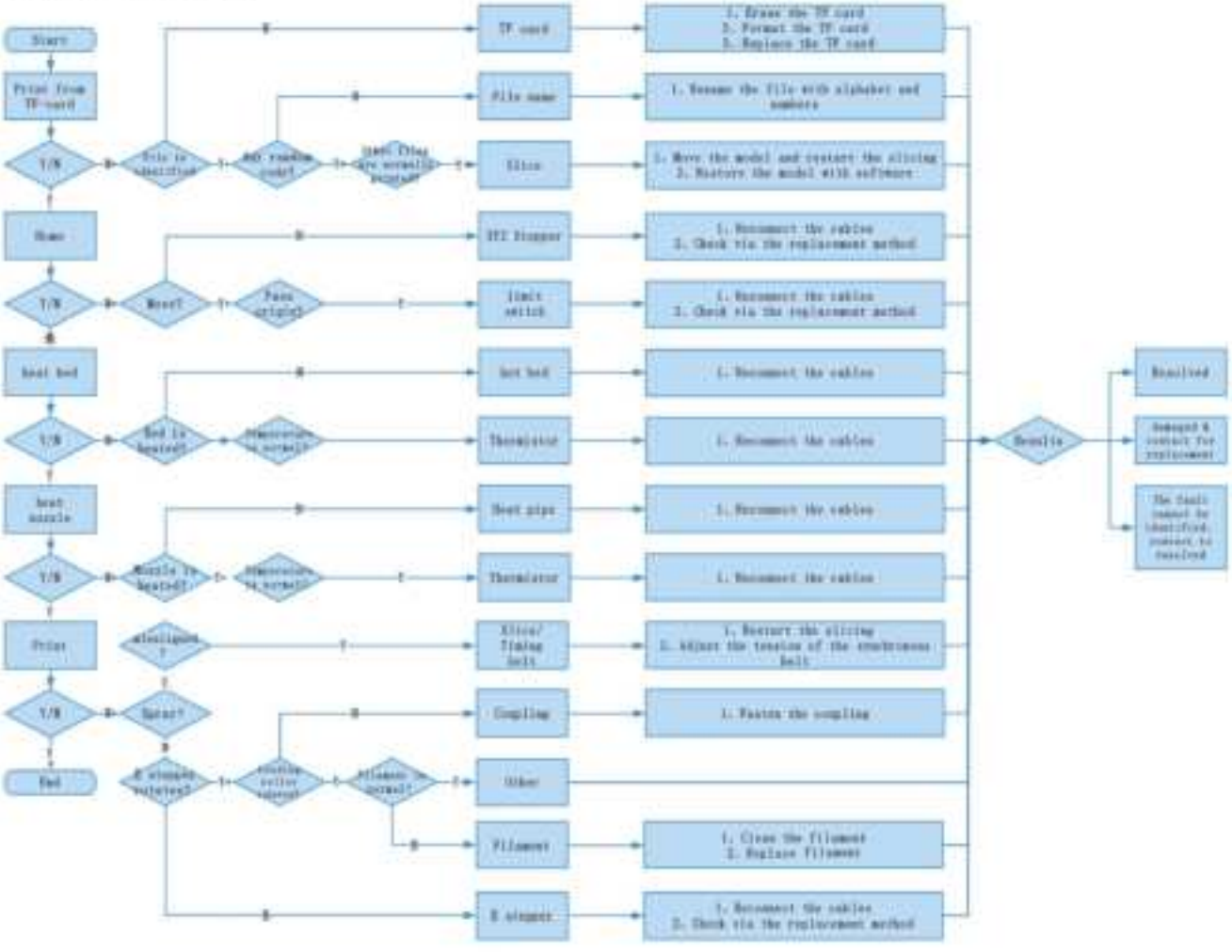

故障检修

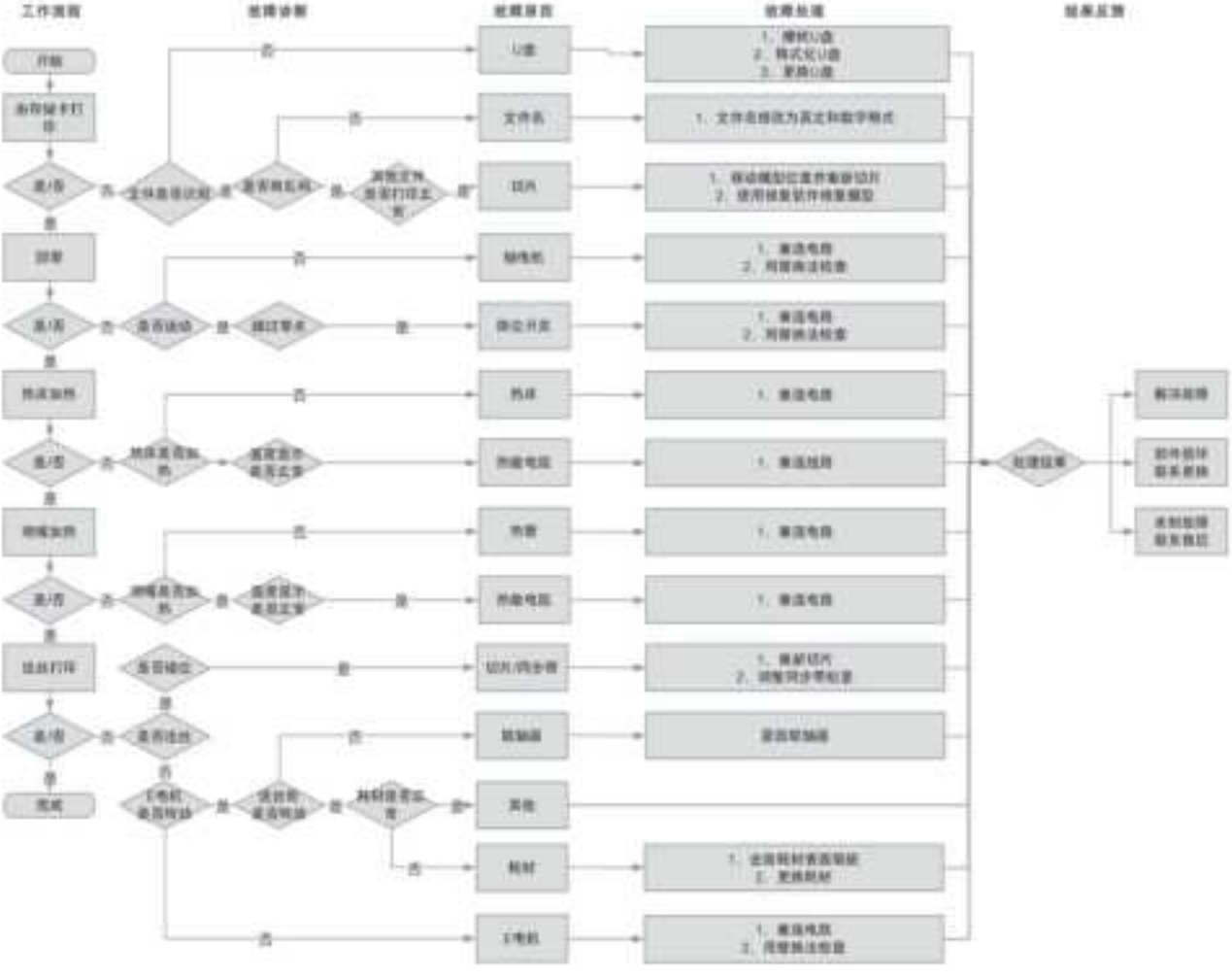

工作演示
故障诊断
故障原因
故障处理
结果反馈
开始
未存储卡打印
是/否
否
是
U盘
文件名
切片
轴电机
保定开关
热床
热敏电阻
热管
热敏电阻
切片/同步带
筑轴器
其他
耗材
工电机
1、更换U盘
2、格式化U盘
3、更换U盘
1、文件名修改为英文和数字格式
1、保证模型位置并重新切片
2、使用修复软件修复模型
1、重连电路
2、用管换法检查
1、重连电路
2、用管换法检查
1、重连电路
1、重连线路
1、重连电路
1、重连电路
1、重新切片
2、调整同步带松紧
1、更换耗材
2、更换耗材
1、重连电路
2、用管换法检查
处理结果
解决故障

Due to the differences between different machine models, the physical objects and the final images can differ.The final explanation rights shall be reserved by Shenzhen Creality 3D Technology Co., Ltd.

因每款机型不同,实物与图可能有所差异,请以实物为准,最终解释归深圳市创想三维科技有限公司所有。

SHENZHEN CREALITY 3D TECHNOLOGY CO.,LTD.

11F & Room 1201,Block 3,JinChengYuan,Tongsheng Community, Dalang,Longhua District,Shenzhen,China,518109

Official Website: www.creality.com

Tel: +86 755-8523 4585

E-mail: info@creality.com cs@creality.com

深圳市创想三维科技有限公司

深圳市龙华区大浪街道同胜社区金城工业园第三栋1201、11层

公司网站：www.cxsw3d.com

服务热线：400 8133 882

0755-8523 4585